Numerical modelling of two dimensional heat transfer in steady state regime

Ioan Sarbu

***Abstract*—** Solving the differential equation of heat conduction the temperature in each point of the body can be determined. However, in the case of bodies with boundary surface of sophisticated geometry no analytical method can be used. In this case the use of numerical methods becomes necessary. The finite element method is based on the integral equation of the heat conduction. This is obtained from the differential equation using variational calculus. The temperature values will be calculated on the finite elements. Then, based on these partial solutions, the solution for the entire volume will be determined. Using this method we can divide into elements also fields with any border. Also, numerical modelling with boundary elements is used for analysis of heat conduction. In this paper are developed basic ideas of numerical analysis with finite elements and boundary (constant) elements of conductive thermal fields generated or induced into solid body in steady state regime. The temperature distribution in some solid bodies and in pipe insulation is analyzed using analytical method and finite element and boundary element methods, implemented in two computer programs developed by the author. This shows the good performance of the proposed numerical models.

***Keywords*—** Heat transfer, Steady state regime, Finite elements, Boundary elements, Variational calculus, Numerical models, Computer programs.

I. Introduction

MODERN computational techniques facilitate solving problems with imposed boundary conditions using different numerical methods [6], [7], [9], [16–19]. Numerical analysis of heat transfer [12], [13] has been independently though not exclusively, developed in three main streams: the finite differences method [22], [24], the finite element method [1], [20], [23] and the boundary element method [3], [4], [5].

The finite differences method (FDM) is based on the differential equation of the heat conduction, which is transformed into a numerical one. The temperature values will be calculated in the nodes of the network. Using this method convergence and stability problem can appear.

The finite element method (FEM) and the boundary element method (BEM) is based on the integral equation of the heat conduction. This is obtained from the differential equation using variational calculus. In first case the temperature values will be calculated on the finite elements. Then, based on these partial solutions, the solution for the entire volume will be determinated. Using this method we can divide into elements also fields with unregulated border. In the BEM case only the boundary is discretized into elements and internal point position can be freely defined.

In this paper the temperature distribution is analyzed in the solid bodies, with linear variation of the properties, using the FEM and the BEM.

Ioan Sarbu is currently a Professor and Department Head at the Building Services Department, "Politehnica" University of Timisoara, 300233 ROMANIA, e-mail address: ioan.sarbu@ct.upt.ro

II. Analytical Model of Heat Conduction

The temperature in a solid body is a function of the time and space coordinates. The points corresponding to the same temperature value belong to an isothermal surface. This surface in a two dimensional Cartesian system is transformed into an isothermal curve.

The heat flow rate Q represents the heat quantity through an isothermal surface S in the time unit:

$$Q = \int_S q \, \mathrm{d}s \tag{1}$$

where the density of heat flow rate q is given by the Fourier law:

$$q = -\lambda \frac{\partial t}{\partial n} = -\lambda \operatorname{grad} t \tag{2}$$

in which λ is the thermal conductivity of the material.

The thermal conductivity of the building materials is the function of the temperature and variation can accordingly be expressed as:

$$\lambda = \lambda_0 \left[1 + b\left(t - t_0\right)\right] \tag{3}$$

in which: λ_0 is the thermal conductivity corresponding to the t_0 temperature; b – material constant.

If there is heat conduction within an inhomogeneous and anisotropy material, considering the heat conductivity constant in time, the temperature variation in space and time is given by the Fourier equation:

$$\rho c \frac{\partial t}{\partial \tau} = \frac{\partial}{\partial x}\left(\lambda_x \frac{\partial t}{\partial x}\right) + \frac{\partial}{\partial y}\left(\lambda_y \frac{\partial t}{\partial y}\right) + \frac{\partial}{\partial z}\left(\lambda_z \frac{\partial t}{\partial z}\right) + Q_0 \tag{4}$$

in which: t is the temperature; τ – time; ρ – material density; c – specific heat of the material; λ_x, λ_y, λ_z – thermal conductivity in the directions x, y and z; Q_0 – power of the internal sources.

To solve the differential equations it is necessary to have supplementary equations. These equations contain the geome-

trical conditions of the analysis field, the starting conditions (at $\tau = 0$) and the boundary conditions. The boundary conditions (Fig. 1) describe the interaction between the analyzed field and the surroundings. In function of these interactions different conditions are possible:

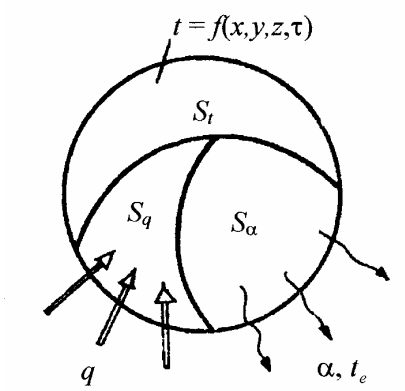

Fig. 1 Boundary conditions

– the *Dirichlet* (type I) boundary conditions give us the temperature values on the boundary surface S_t of the analyzed field like a space function constant or variable in time:

$$t = f\left(x, y, z, \tau\right) \tag{5}$$

– the *Neumann* (type II) boundary conditions gives us the value of the density of heat flow rate through the S_q boundary surface of the analyzed field:

$$q = \lambda_x \frac{\partial t}{\partial x} n_x + \lambda_y \frac{\partial t}{\partial y} n_y + \lambda_z \frac{\partial t}{\partial z} n_z \tag{6}$$

in which: n_x, n_y, n_z are the cosine directors corresponding to the normal direction on the S_q boundary surface.

– the *Cauchy* (type III) boundary conditions gives us the external temperature value and the convective heat transfer coefficient value between the S_α boundary surface of the body and the surrounding fluid:

$$\alpha\left(t - t_e\right) = \lambda_x \frac{\partial t}{\partial x} n_x + \lambda_y \frac{\partial t}{\partial y} n_y + \lambda_z \frac{\partial t}{\partial z} n_z \tag{7}$$

in which: α is yhe convective heat transfer coefficient from S_α to the fluid (or inversely); t_e –fluid temperature.

The analytical model described by the equations (4)…(7) can be completed with the material equations which provide us information about variation of the material properties depending on temperature. In the case of matertials with linear physical properties, this equations (λ = const.) are not used in the model.

Solving the differential equation of the heat conduction (4) we can determine the temperature values in each point of the body. However, in the case of bodies with boundary surface of sophisticated geometry, the equation (4) cannot be solved using analytical methods. In this case numerical methods should be applied. The increasing availability of computers has also lead into the direction of more frequent use of these methods.

III. Formulation of Numerical Model with Finite Elements

To use the FEM, the transformation of the equations (4)…(7) into integral model is necessary. To realize this transformation we can use variation calculus.

The temperature $t(x, y, z, \tau)$ which represent a solution for the differential heat conduction equation (4) and for conditions (5), (6), (7), also represents a solution for the steady state equation of the V field:

$$\delta F = 0 \tag{8}$$

which is equivalent, from mathematical point of view, with the equations (4)…(7) and were F is the functional of the heat conduction.

$$F = \int_V \frac{1}{2}\left[\lambda_x\left(\frac{\partial t}{\partial x}\right)^2 + \lambda_y\left(\frac{\partial t}{\partial y}\right)^2 + \lambda_z\left(\frac{\partial t}{\partial z}\right)^2\right] \mathrm{d}V +$$

$$+ \int_V \left(\rho\, c \frac{\partial t}{\partial \tau} - Q_0\right) t\, \mathrm{d}V - \int_{S_q} q\, t\, \mathrm{d}S + \int_{S_\alpha} \alpha\, t\left(\frac{1}{2} t - t_e\right) \mathrm{d}S \tag{9}$$

in which: Q_0 is positive when the internal sources produce heat and negative when these sources absorb heat; q is posi-tive when the body receives heat and negative when the body yields heat to the surrounding fluid; α is positive on the surfaces where the heat transfer happens from the body to the fluid and it is negative inversely.

The minimization of the functional is done correspondingly to each finite element. The solution for the entire field is obtained joining the partial solutions.

Though the heat conduction is carried out within three–dimensional bodies, the temperature distribution variation is significant only in certain directions. Thus, the analysis of temperature distribution in bars, plain or cylindrical walls is done using a two–dimensional model.

In the steady state heat transfer processes the temperature does not depend on the time, thus in the equation (9) $\partial t / \partial \tau = 0$. In addition, at two–dimensional problems, the temperature does not vary on z direction, thus $\partial t / \partial z = 0$.

A. General Equations of the FEM

In our case the equation (9) can be expressed as:

$$F = \int_V \left\{\frac{1}{2}\left[\lambda_x\left(\frac{\partial t}{\partial x}\right)^2 + \lambda_y\left(\frac{\partial t}{\partial y}\right)^2 + \lambda_z\left(\frac{\partial t}{\partial z}\right)^2\right] - Q_0 t\right\} \mathrm{d}V -$$

$$- \int_{S_q} q t \mathrm{d}S + \int_{S_\alpha} \alpha t\left(\frac{1}{2} t - t_e\right) \mathrm{d}S \tag{10}$$

Taking into account that the temperature function is not continuous on the entire field, the equation (10) can be integrated only on the finite elements. On the entire field the functional F can be written as a sum of m functionals F^e, where m is the number of finite elements:

$$F = \sum_{e=1}^{m} F^e \tag{11}$$

$$F=\sum_{e=1}^{m}\left\{\int_{V_e}\frac{1}{2}\left[\lambda_x\left(\frac{\partial t^e}{\partial x}\right)^2+\lambda_y\left(\frac{\partial t^e}{\partial y}\right)^2\right]\mathrm{d}V-\int_{V_e}Q_0t^e\mathrm{d}V-\right.$$

$$\left.-\int_{S_{qe}}qt^e\mathrm{d}S+\int_{S_{\alpha e}}\alpha t^e\left(\frac{1}{2}t^e-t_e\right)\mathrm{d}S\right\} \quad (12)$$

where the "e"exponent refers to a finite element.

For a given finite element the temperature t^e can be calculated based on the temperature values in the nodes:

$$t^e=N_1t_1+N_2t_2+...+N_nt_n=[N]\{t\}_e \quad (13)$$

where: n is the number of the finite element nodes; $[N]$ – form matrix of the finite element; $\{t\}_e$ – vector of the temperature values in the nodes.

In the expression (12) appear the partial derivates of the temperature, therefore the equation (13) should be derived:

$$\{B\}=\begin{Bmatrix}\dfrac{\partial t^e}{\partial x}\\ \dfrac{\partial t^e}{\partial y}\end{Bmatrix}=\begin{bmatrix}\dfrac{\partial N_1}{\partial x} & \dfrac{\partial N_2}{\partial x}\cdots & \dfrac{\partial N_n}{\partial x}\\ \dfrac{\partial N_1}{\partial y} & \dfrac{\partial N_2}{\partial y}\cdots & \dfrac{\partial N_n}{\partial y}\end{bmatrix}\begin{Bmatrix}t_1\\ t_2\\ t_n\end{Bmatrix}=[J]\{t\}_e \quad (14)$$

If the thermal conductivities are written in matrix form:

$$[D]=\begin{bmatrix}\lambda_x & 0\\ 0 & \lambda_y\end{bmatrix} \quad (15)$$

then equation (12) can accordingly be expressed as:

$$F^e=\int_{V_e}\frac{1}{2}([J]\{t\}_e)^T[D][J]\{t\}_e\mathrm{d}V-\int_{V_e}Q_o[N]\{t\}_e\mathrm{d}V-\int_{S_{qe}}q[N]\{t\}_e\mathrm{d}S+$$

$$+\int_{S_{\alpha e}}\frac{\alpha}{2}([N]\{t\}_e)^2\mathrm{d}S-\int_{S_{\alpha e}}\alpha t_e[N]\{t\}_e\mathrm{d}S \quad (16)$$

Because

$$\begin{aligned}&([J]\{t\}_e)^T=\{t\}_e^T[J]^T\\ &([N]\{t\}_e)^2=([N]\{t\}_e)^T([N]\{t\}_e)=\{t\}_e^T[N]^T[N]\{t\}_e\end{aligned} \quad (17)$$

the equation (16) can be expressed as:

$$F^e=\int_{V_e}\frac{1}{2}\{t\}_e^T[J]^T[D][J]\{t\}_e\mathrm{d}V-\int_{V_e}Q_o[N]\{t\}_e\mathrm{d}V-\int_{S_{qe}}q[N]\{t\}_e\mathrm{d}S+$$

$$+\int_{S_{\alpha e}}\frac{\alpha}{2}\{t\}_e^T[N]^T[N]\{t\}_e\mathrm{d}S-\int_{S_{\alpha e}}\alpha t_e[N]\{t\}_e\mathrm{d}S \quad (18)$$

If we derive the matrix equation (18) the further equation is obtained:

$$\frac{\partial F^e}{\partial\{t\}_e}=\left(\int_{V_e}[J]^T[D][J]\mathrm{d}V+\int_{S_{\alpha e}}\alpha[N]^T[N]\mathrm{d}S\right)\{t\}_e-$$

$$-\int_{Ve}Q_o[N]^T\mathrm{d}V-\int_{S_{qe}}q[N]^T\mathrm{d}S-\int_{S_{\alpha e}}\alpha t_e[N]^T\mathrm{d}S \quad (19)$$

Because $dV=h\,dA$ and $dS=h\,dL$, where h is the thickness of the finite element, dA – aria of the finite element and dL – length of the finite element side, result:

$$\frac{\partial F^e}{\partial\{t\}_e}=h\left(\int_{A_e}[J]^T[D][J]\mathrm{d}A+\int_{L_e}\alpha[N]^T[N]\mathrm{d}L\right)\{t\}_e-$$

$$-h\int_{A_e}Q_o[N]^T\mathrm{d}A-h\int_{L_e}q[N]^T\mathrm{d}L-h\int_{L_e}\alpha t_e[N]^T\mathrm{d}L \quad (20)$$

The finite element thickness h is considered constant and equal with 1 m. The equation (20), can be written as in compressed form:

$$\frac{\partial F^e}{\partial\{t\}_e}=[k]\{t\}_e-\{p\} \quad (21)$$

where:

$$[k]=h\int_{A_e}[J]^T[D][J]\mathrm{d}A+h\int_{L_{\alpha e}}\alpha[N]^T[N]\mathrm{d}L \quad (22)$$

$$\{p\}=h\int_{A_e}Q_0[N]^T\mathrm{d}A+h\int_{L_{qe}}q[N]^T\mathrm{d}L+h\int_{L_{\alpha e}}\alpha t_e[N]^T\mathrm{d}L \quad (23)$$

in which: $[k]$ is the matrix of the heat conduction corresponding to a finite element, the first term is related to conduction and the second term to convection on the $L_{\alpha e}$ side of the $S_{\alpha e}$ boundary surface; $\{p\}$ – vector of heat sources containing the internal sources Q_0, the density of heat flow rate q on the S_{qe} boundary surface and convection on the S_α boundary surface.

The minimization of the F functional supposes the equality with zero of the first derivate in each point of the studied field. Taking into account of (11) results:

$$\frac{\partial F}{\partial\{t\}}=\frac{\partial}{\partial\{t\}}\sum_{e=1}^{m}F^e=\sum_{e=1}^{m}\frac{\partial F}{\partial\{t\}_e} \quad (24)$$

Introducing equation (21) in (24) we obtain the equation system corresponding to the entire field:

$$[K]\{t\}=\{P\} \quad (25)$$

where:

$$[K]=\sum_{1}^{m}[\mathrm{k}];\quad \{P\}=\sum_{1}^{m}\{p\} \quad (26)$$

in which: $[K]$ is matrix of heat conduction of the entire field; $\{P\}$ – vector of heat sources corresponding to studies field; $\{t\}$ – vector of unknown temperatures.

The equation (25) represents the form with finite element of the differential equation of heat conduction, which contains a number of equations equal to the number of the nodes with unknown temperature values.

B. *Matrix of the Heat Conduction*

If we use finite elements with triangle form in a certain point of the finite element, using the relation (13) the t^e temperature (Fig. 2), can be written as:

$$t^e=N_it_i+N_jt_j+N_kt_k=[N_iN_jN_k]\begin{Bmatrix}t_i\\ t_j\\ t_k\end{Bmatrix}=[N]\{t\}_e \quad (27)$$

in which: t_i, t_j, t_k are the temperatures in i, j, k nodes (nodes of triangle finite element); $[N]$ – form matrix of the finite element [17], [19].

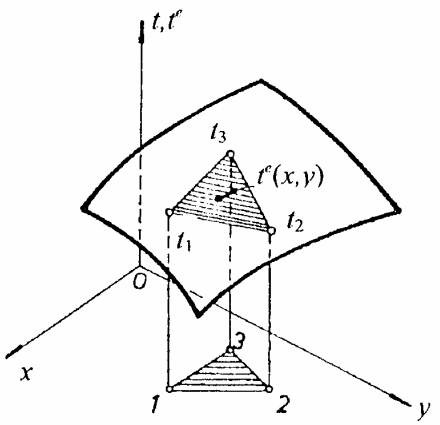

Fig. 2. Finite element with triangle form

The conduction matrix of a finite element is:

$$[k]=[k_1]+[k_2] \tag{28}$$

where:

$$[k_1]=h\int_{A_e}[J]^T[D][J]\mathrm{d}A;\quad [k_2]=h\alpha\int_{L_{\alpha e}}[N]^T[N]\mathrm{d}L \tag{29}$$

The $[J]$ matrix, using the relation (14) can be expressed as:

$$\{B\}=\begin{Bmatrix}\dfrac{\partial t^e}{\partial x}\\ \dfrac{\partial t^e}{\partial y}\end{Bmatrix}=\begin{bmatrix}\dfrac{\partial N_i}{\partial x} & \dfrac{\partial N_j}{\partial x} & \dfrac{\partial N_k}{\partial x}\\ \dfrac{\partial N_i}{\partial y} & \dfrac{\partial N_j}{\partial y} & \dfrac{\partial N_k}{\partial y}\end{bmatrix}\begin{Bmatrix}t_i\\ t_j\\ t_k\end{Bmatrix}=[J]\{t\}_e \tag{30}$$

If we derive the elements of the form matrix:

$$[J]=\begin{vmatrix}\dfrac{\partial N_i}{\partial x} & \dfrac{\partial N_j}{\partial x} & \dfrac{\partial N_k}{\partial x}\\ \dfrac{\partial N_i}{\partial y} & \dfrac{\partial N_j}{\partial y} & \dfrac{\partial N_k}{\partial y}\end{vmatrix}=\frac{1}{2A_e}\begin{bmatrix}b_i & b_j & b_k\\ c_i & c_j & c_k\end{bmatrix} \tag{31}$$

where A_e is the area of the finite element, and the b respective c can be written as [19]:

$$\begin{aligned}&b_i=y_i-y_k;\quad b_j=y_k-y_i;\quad b_k=y_i-y_j\\ &c_i=x_k-x_j;\quad c_j=x_i-x_k;\quad c_k=x_j-x_i\end{aligned} \tag{32}$$

Consequently, the $[J]$ matrix is constant. Because the λ_x and λ_y thermal conductivities do not vary for a finite element, the $[D]$ matrix is also constant, thus:

$$[k_1]=h\int_{A_e}[J]^T[D][J]\mathrm{d}A=h[J]^T[D][J]A_e \tag{33}$$

Introducing the expression of $[J]$ matrix from (31) and the expression of $[D]$ matrix from (15) in (33) results:

$$[k_1]=\frac{h}{4A_e}\begin{bmatrix}\lambda_x b_i b_i+\lambda_y c_i c_i & \lambda_x b_i b_j+\lambda_y c_i c_j & \lambda_x b_i b_k+\lambda_y c_i c_k\\ \lambda_x b_j b_i+\lambda_y c_j c_i & \lambda_x b_j b_j+\lambda_y c_j c_j & \lambda_x b_j b_k+\lambda_y c_j c_k\\ \lambda_x b_k b_i+\lambda_y c_k c_i & \lambda_x b_k b_j+\lambda_y c_k c_j & \lambda_x b_k b_k+\lambda_y c_k c_k\end{bmatrix} \tag{34}$$

The matrix $[k_2]$ from the equation (28) can be written as:

$$[k_2]=h\alpha\int_{L_{\alpha e}}\begin{bmatrix}N_iN_i & N_iN_j & N_iN_k\\ N_jN_i & N_jN_j & N_jN_k\\ N_kN_i & N_kN_j & N_kN_k\end{bmatrix}\mathrm{d}L \tag{35}$$

Using the L – natural coordinates and considering that convective heat transfer exists on the jk side of the finite element, we obtain:

$$[k_2]=h\alpha\int_{L_{\alpha e}}\begin{bmatrix}0 & 0 & 0\\ 0 & L_jL_j & L_jL_k\\ 0 & L_jL_k & L_kL_k\end{bmatrix}\mathrm{d}L \tag{36}$$

To solve the equation (36), the following relation should be used:

$$\int_{X_i}^{X_j}L_i^{\alpha}L_j^{\beta}\mathrm{d}x=\frac{\alpha!\,\beta!\,(X_j-X_i)}{(\alpha+\beta+1)!} \tag{37}$$

Consequently for products with the same indices j or k is obtained:

$$\int_{L_{\alpha e}}L_jL_j\mathrm{d}L=\int_{L_{\alpha e}}L_kL_k\mathrm{d}L=\int_{L_{\alpha e}}L_j^2\mathrm{d}L=\frac{2!0!}{(2+0+1)!}L_{\alpha e}=\frac{L_{\alpha e}}{3} \tag{38}$$

and for products with different indices j and k is obtained:

$$\int_{L_{\alpha e}}L_jL_k\mathrm{d}L=\int_{L_{\alpha e}}L_kL_j\mathrm{d}L=\frac{1!1!}{(1+1+1)!}L_{\alpha e}=\frac{L_{\alpha e}}{6} \tag{39}$$

Substituting into equation (36) results:

$$[k_2]=\frac{h\alpha L_{\alpha e}}{6}\begin{bmatrix}0 & 0 & 0\\ 0 & 2 & 1\\ 0 & 1 & 2\end{bmatrix} \tag{40}$$

If convective heat transfer exists the ij or ki sides of the finite element are:

$$[k_2]=\frac{h\alpha L_{\alpha e}}{6}\begin{bmatrix}2 & 1 & 0\\ 1 & 2 & 0\\ 0 & 0 & 0\end{bmatrix};[k_2]=\frac{h\alpha L_{\alpha e}}{6}\begin{bmatrix}2 & 0 & 1\\ 0 & 0 & 0\\ 1 & 0 & 2\end{bmatrix} \tag{41}$$

The matrix $[k_2]$ exists only in the case when at least, o none side of the finite element heat transfer is realized by convection.

C. Vector of the Heat Sources

This vector is based on the equation (23) from three terms, which can be calculated using the L–natural coordinates. Supposing that Q_0 is constant for a finite element, using the following relation:

$$\int_{A_e}L_i^{\alpha}L_j^{\beta}L_k^{\gamma}\mathrm{d}A=\frac{\alpha!\,\beta!\,\gamma!}{(\alpha+\beta+\gamma+2)!}2A_e \tag{42}$$

we obtain that:

$$\{p_Q\}=h\int_{A_e}Q_o[N]^T\mathrm{d}A=hQ_o\int_{A_e}\begin{Bmatrix}N_i\\ N_j\\ N_k\end{Bmatrix}\mathrm{d}A=$$

$$=hQ_o\int_{A_e}\begin{Bmatrix}L_i\\ L_j\\ L_k\end{Bmatrix}\mathrm{d}A=\frac{hQ_oA_e}{3}\begin{Bmatrix}1\\ 1\\ 1\end{Bmatrix} \tag{43}$$

The second term, for a certain density of heat flow rate, corresponds to the heat transfer on the boundary surface of the

studied field. Supposing that the body receives the heat flow through $L_{ki} = L_{qe}$ side of the finite element, using the relation (37) we obtain:

$$\{p_q\} = h\int_{L_{qe}} q[N]^T \mathrm{d}L = hq\int_{L_{qe}} \begin{Bmatrix} N_i \\ 0 \\ N_k \end{Bmatrix} \mathrm{d}L = hq\int_{L_{qe}} \begin{Bmatrix} L_i \\ 0 \\ L_k \end{Bmatrix} \mathrm{d}L = \frac{hqL_{qe}}{2}\begin{Bmatrix} 1 \\ 0 \\ 1 \end{Bmatrix} \quad (44)$$

The third term, from the equation (23), corresponds to convective heat transfer on the jk ($L_{jk} = L_{\alpha e}$) side of the finite element. Using the relation (37) we obtain:

$$\{p_\alpha\} = h\int_{L_{\alpha e}} \alpha t_e [N]^T \mathrm{d}L = h\alpha t_e \int_{L_{\alpha e}} \begin{Bmatrix} 0 \\ N_j \\ N_k \end{Bmatrix} \mathrm{d}L =$$

$$= h\alpha t_e \int_{L_{\alpha e}} \begin{Bmatrix} 0 \\ L_j \\ L_k \end{Bmatrix} \mathrm{d}L = \frac{h\alpha t_e L_{\alpha e}}{2}\begin{Bmatrix} 0 \\ 1 \\ 1 \end{Bmatrix} \quad (45)$$

It could be observed that the element zero in the vector (44) and (45) can occupy any position, corresponding to the side of finite element with heat transfer.

Based on the equation systems obtained for the finite elements, they can realize the equation system for the entire studied field. This system can be solved using analytical or iterative methods.

In present there are different programms on the software market which permit numerical analysis of the temperature distribution (e.g. WAEBRU) but these programms are too expensive and our department cannot buy them. In this context to analyze the temperature distribution in a solid body under steady state heat transfer regime using the numerical model presented above the TAFEM software has been developed by author of this article. The equation system is solved using the Gauss method.

IV. Development of Numerical Model with Boundary Elements

In the case of a plain wall, inside the analysis field, the heat conductivity in steady state regime is modelled by the Laplace equation [4]:

$$\nabla^2 t = 0 \quad (46)$$

On Γ_t portion of boundary Γ of the analysis field Dirichlet boundary conditions are imposed and leftoner portion Γ_q Neumann boundary conditions are imposed.

In order to determine the temperature on the boundary of the analysis field one uses the following integral equation [3], [4], [6]:

$$c(\zeta)t(\zeta) + \int_\Gamma t(\overset{o}{X})v^*(\zeta,\overset{o}{X})\mathrm{d}\Gamma(\overset{o}{X}) = \int_\Gamma \frac{\partial t(\overset{o}{X})}{\partial n} u^*(\zeta,\overset{o}{X})\mathrm{d}\Gamma(\overset{o}{X}) \quad (47)$$

where: ζ is the point in which one writes the integral equation (source point); $c(\zeta)$ – a coefficient; $\overset{o}{X}$ – the current integration point; $u^*(\zeta,\overset{o}{X}) = (1/2\pi)\left[1/r(\zeta,\overset{o}{X})\right]$ – fundamental solution; $v^* = \partial u^*/\partial n$ – normal derivative of this solution.

The distance $r(\zeta, \overset{o}{X})$ between the current point $\overset{o}{X}$ and the source point ζ is calculated with the relation:

$$r(\zeta,\overset{o}{X}) = \left\{\left[x(\overset{o}{X}) - x(\zeta)\right]^2 + \left[y(\overset{o}{X}) - y(\zeta)\right]^2\right\}^{\frac{1}{2}} \quad (48)$$

Boundary Γ is discretized into N constant boundary elements for which one considers temperatures t_j, respectively the normal derivative $(\partial t/\partial n)_j$ constant and equal to the mid point (node) value of the element. Thus the integral equation is obtained under the following discretized form:

$$c_i t_i + \sum_{j=1}^{N} t_j \int_{\Gamma_j} v^*(\zeta,\overset{o}{X})\mathrm{d}\Gamma(\overset{o}{X}) = \sum_{j=1}^{N}\left(\frac{\partial t}{\partial n}\right)_j \int_{\Gamma_j} u^*(\zeta,\overset{o}{X})\mathrm{d}\Gamma(\overset{o}{X}) \quad (49)$$

or

$$c_i t_i + \sum_{j=1}^{N} \hat{A}_{ij} t_j = \sum_{j=1}^{N} B_{ij}\left(\frac{\partial t}{\mathrm{d}n}\right)_j \quad (50)$$

in which coefficients $\hat{A}_{ij}$ and B_{ij} have the expressions:

$$\hat{A}_{ij} = \int_{\Gamma_j} v^*(\zeta,\overset{o}{X})\mathrm{d}\Gamma(\overset{o}{X});\ B_{ij} = \int_{\Gamma_j} u^*(\zeta,\overset{o}{X})\mathrm{d}\Gamma(\overset{o}{X}) \quad i \neq j \quad (51)$$

When $i = j$ these become:

$$A_{ii} = \frac{1}{2} + \hat{A}_{ii};\quad B_{ii} = \frac{l_i}{2\pi}\left(1 - 1\mathrm{n}\frac{l_i}{2}\right) \quad (52)$$

Explicitely, equation (50) generates a liniar and compatible system of N equations with $2N$ unknowns [t_j and $(\partial t/\partial n)_j$] and after implementing the boundary conditions, the number of unknowns is reduced to N. In the case of constant boundary elemnents, coefficient c_i has the value 1/2. Coefficients $\hat{A}_{ij}$ and B_{ij} from (51) is computed using a Gauss quadrature [8], [19]:

$$\hat{A}_{ij} = \frac{l_j}{2}\sum_{k=1}^{m} v_k^* w_k;\quad B_{ij} = \frac{l_j}{2}\sum_{k=1}^{m} u_k^* w_k \quad (53)$$

in which l_j is the length of the j boundary element.

Introducing notations: $n_x = \cos(n, x)$; $n_y = \cos(n, y)$ and using, for $\forall\ \overset{o}{X} \in \Gamma$, the parametric equations:

$$x = A\xi + B;\quad y = C\xi + D,\quad \xi \in [-1,1] \quad (54)$$

where: $x \in [x_j, x_{j+1}]$ and $y \in [y_j, y_{j+1}]$, the following relations are obtained:

$$n_x = \frac{-C}{\sqrt{A^2 + C^2}};\quad n_y = \frac{A}{\sqrt{A^2 + C^2}} \quad (55)$$

in which (x_j, y_j) and (x_{j+1}, y_{j+1}) are the extremities of the boundary element j.

The analysis field is transformed into a dimensionless one by replacing the dimensional variables (x, y) with dimensionless ones (x^*, y^*):

$$x^* = \frac{x}{x_{\max}};\quad y^* = \frac{y}{x_{\max}} \quad (56)$$

in which $x_{\max}$ is the maximum extension of the analysis field after axis Ox.

In order to determine the temperature inside of the analysis field is used the integral representation:

$$t(\zeta_i) = \int_{\Gamma} \frac{\partial t(\overset{o}{X})}{\partial n^*} u^*(\zeta_i, \overset{o}{X}) d\Gamma(\overset{o}{X}) - \int_{\Gamma} t(\overset{o}{X}) v^*(\zeta_i, \overset{o}{X}) d\Gamma(\overset{o}{X}) \qquad (57)$$

in which: $\zeta_i \in \overset{o}{\Omega}$, where $\overset{o}{\Omega}$ represent the inside of the analysis field Ω ($\Omega = \overset{o}{\Omega} \cup \Gamma$).

After the discretization of boundary Γ into N constant boundary elements one obtains the integral equation under discretized form:

$$t_i(\zeta_i) = \sum_{j=1}^{N} \left(\frac{\partial t}{\partial n^*} \right)_j \int_{\Gamma_j} u^*(\zeta_i, \overset{o}{X}) d\Gamma(\overset{o}{X}) - \sum_{j=1}^{N} t_j \int_{\Gamma_j} v^*(\zeta_i, \overset{o}{X}) d\Gamma(\overset{o}{X}) \qquad (58)$$

which can be writhen as such:

$$t_i = \sum_{j=1}^{N} \overline{B}_{ij} \left(\frac{\partial t}{\partial n^*} \right)_j - \sum_{j=1}^{N} \overline{A}_{ij} t_j \qquad (59)$$

Coefficients $\overline{A}_{ij}$ and $\overline{B}_{ij}$ are evaluated using a Gauss quadrature:

$$\overline{A}_{ij} = \frac{l_j}{2} \sum_{k=1}^{m} v_k^* w_k; \quad \overline{B}_{ij} = \frac{l_j}{2} \sum_{k=1}^{m} u_k^* w_k \qquad (60)$$

in which: m is the number of Gauss type points; w_k – weight coefficients.

Temperatures t_i from points ζ_i are easily determined taking into account that values t_j and $(\partial t/\partial n^*)_j$ are known on the analysis field boundary, and coefficients $\overline{A}_{ij}$ and $\overline{B}_{ij}$ are computed with equation (54).

By knowing values t_j and t_i of the temperature on the analysis field boundary, the group of coordinate points (x^*, y^*) for which t = const. represents the isothermal curves.

The numerical model based on BEM has been implemented in computer program TABEM, realized in Fortran programming language, for IBM–PC compatible systems.

V. Applications

A. Temperature Distribution in Orthotropic Body

The temperature distribution is analyzed in a solid body 500×400 mm sectional dimensions (Fig. 3). The body receives heat flow on two sides: q_x = 2320 W, q_y = 928 W. On the other two sides the body transmit heat by convection $\alpha_x = \alpha_y$ = 23.2 W/(m^2·K). The material of the body has orthotropic properties with the following values of the thermal conductivies: λ_x = 11.6 W/(m·K), λ_y = 5.8 W/(m·K).

The studies field is divided into 40 finite elements with 30 nodes. Running the TAFEM program the values of temperatures in the nodes have been obtained and presented in Table I. The temperature distribution in the body is presented in Figure 4.

Wood is the only one orthotropic material which is used in civil engineering, and this property should be taken into account at heat loss determination of the buildings (e.g. heat flow direction perpendicular or parallel on the fiber).

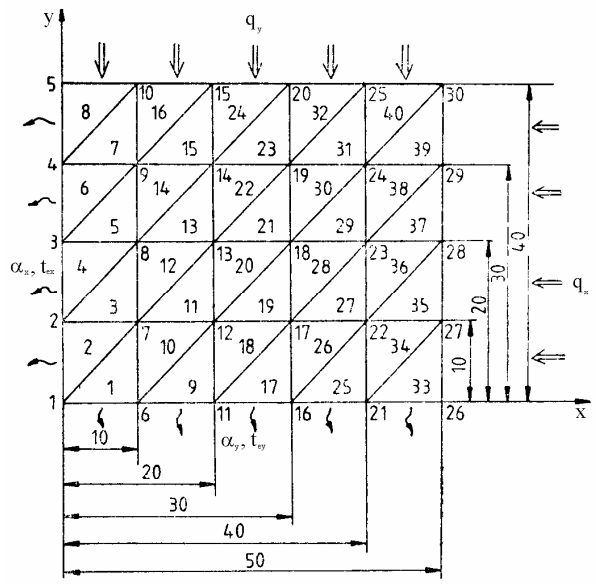

Fig. 3 Analysis field

Table I. Temperature values in the nodes

Node	Coordinates		t [°C]	Node	Coordinates		t [°C]
	x	y			x	y	
0	1	2	3	4	5	6	7
1	0.0	0.0	49.063	16	30.0	0.0	78.094
2	0.0	10.0	65.543	17	30.0	10.0	103.400
3	0.0	20.0	79.955	18	30.0	20.0	124.892
4	0.0	30.0	93.393	19	30.0	30.0	143.586
5	0.0	40.0	107.704	20	30.0	40.0	160.357
6	10.0	0.0	58.153	21	40.0	0.0	90.677
7	10.0	10.0	77.100	22	40.0	10.0	119.105
8	10.0	20.0	94.157	23	40.0	20.0	142.159
9	10.0	30.0	109.882	24	40.0	30.0	161.681
10	10.0	40.0	125.446	25	40.0	40.0	178.732
11	20.0	0.0	67.581	26	50.0	0.0	107.376
12	20.0	10.0	89.601	27	50.0	10.0	137.498
13	20.0	20.0	109.025	28	50.0	20.0	161.191
14	20.0	30.0	126.452	29	50.0	30.0	181.013
15	20.0	40.0	142.752	30	50.0	40.0	198.159

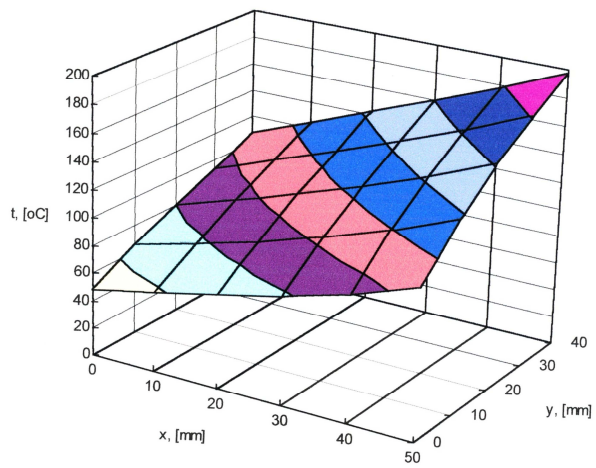

Fig. 4 Temperature distribution in the studied body

B. Temperature Distribution in Pipe Insulation

The temperature distribution in pipe insulation was analyzed (Fig. 5) using the TAFEM program. The calculus was made for a pipe with 800 mm nominal diameter and the hot water temperature was 150 °C. The ambient temperature was considered 1°C.

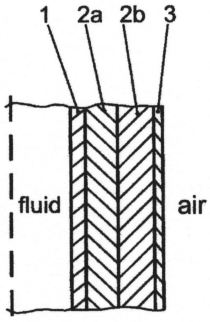

Fig. 5 Structure of insulation
1–pipe wall; 2a, 2b – insulation layers;
3–protection coat

To obtain results which describe the real situation as exactly as possible the convective heat transfer coefficient on the external insulation surface was considered variable with values between 10 and 25.6 W/(m^2·K).

In Figures 6 and 7 the analyzed field and the temperature distribution are presented in the pipe section. It can be observed that duet to the variable boundary conditions on the insulation surface the isotherm curves are not circular curves which are obtained when the classical calculus is used.

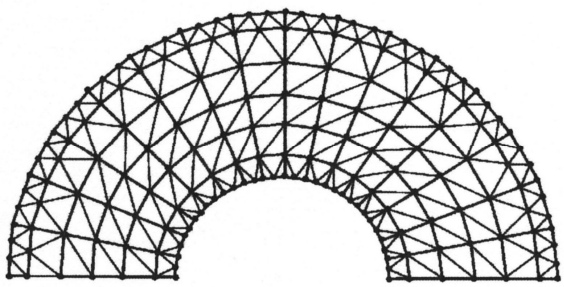

Fig. 6. Analysis field

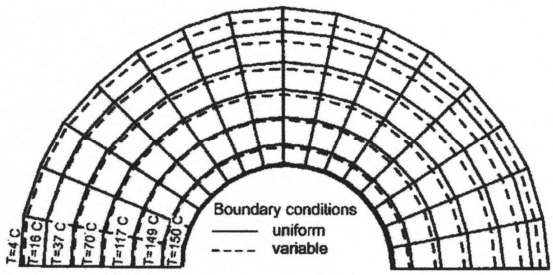

Fig. 7. Temperature distribution in pipe insulation

C. Temperature Distribution in Metallic Plaque

In figures 8 and 9 are considered two variants of a metallic plaque, with dimensions 40×40×70 mm, for which one determines the temperature field using BEM and analytical method (ANM). In figures 10 and 11 are presented the dimensionless analysis domains together with mixed boundary conditions for these boundaries.

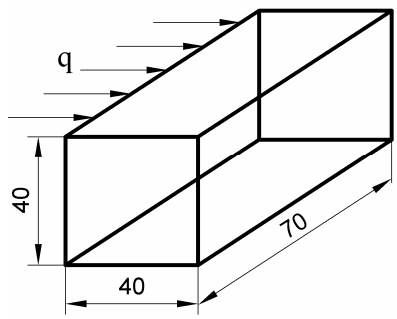

Fig. 8 Metallic plaque

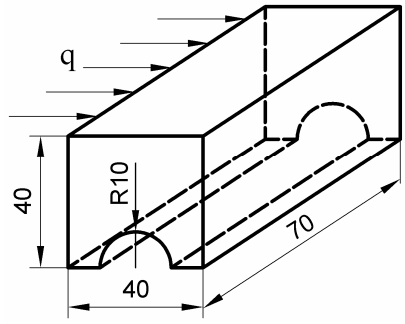

Fig. 9 Metallic plaque with a semicylindrical cut–out

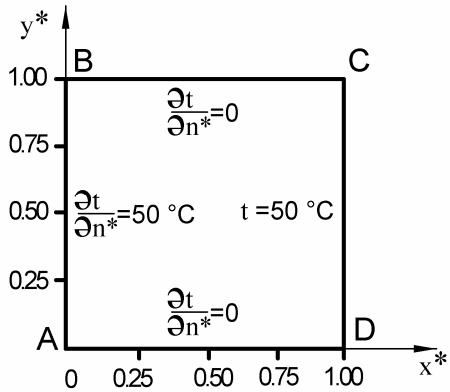

Fig. 10 Boundary conditions for metallic plaque

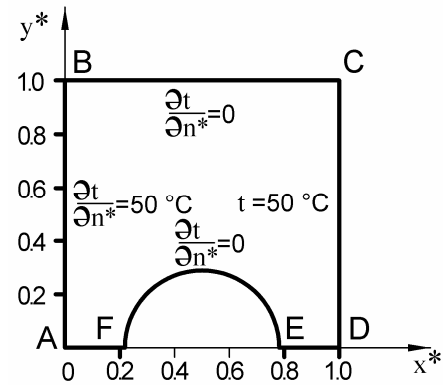

Fig. 11 Boundary conditions for metallic plaque
with semicylindrical cut–out

For metallic plaque in figure 2 the boundary can be discretized into N = 16 boundary elements, one states 9 internal points (Fig. 12) and one applies the computational model based on BEM. The numerical results obtained by means of TABEM program are presented in Table II, comparatively with the ones obtained with ANM [13].

The absolute percentage value of the relative difference toward the analytical solution, for both the temperature ε_t and it normal derivative ε_{ndt} is defined by:

$$\varepsilon_t = \left| \frac{t_{ANM} - t_{BEM}}{t_{ANM}} \right| \cdot 100;$$

$$\varepsilon_{ndt} = \left| \frac{\left(\frac{\partial t}{\partial n^*}\right)_{ANM} - \left(\frac{\partial t}{\partial n^*}\right)_{BEM}}{\left(\frac{\partial t}{\partial n^*}\right)_{ANM}} \right| \cdot 100 \qquad (61)$$

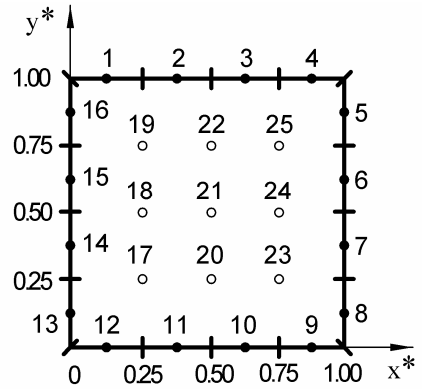

Fig. 12 Discretization of the boundary and internal points of analysis field

Table II. The values t_j and $\left(\frac{\partial t}{\partial n^*}\right)_j$

Point	Coordinates		BEM		ANM	
j	x_j^*	y_j^*	t_j	$\left(\frac{\partial t}{\partial n^*}\right)_j$	t_j	$\left(\frac{\partial t}{\partial n^*}\right)_j$
0	1	2	3	4	5	6
1	0.125	1.000	93.052	0.000	93.750	0.0
2	0.375	1.000	80.705	0.000	81.250	0.0
3	0.625	1.000	68.299	0.000	68.750	0.0
4	0.875	1.000	55.821	0.000	56.250	0.0
5	1.000	0.875	50.000	–51.704	50.000	–50.0
6	1.000	0.625	50.000	–48.290	50.000	–50.0
7	1.000	0.375	50.000	–48.290	50.000	–50.0
8	1.000	0.125	50.000	–51.704	50.000	–50.0
9	0.875	0.000	55.821	0.000	56.250	0.0
10	0.625	0.000	68.299	0.000	68.750	0.0
11	0.375	0.000	80.705	0.000	81.250	0.0
12	0.125	0.000	93.052	0.000	93.750	0.0
13	0.000	0.125	98.776	50.000	100.000	50.0
14	0.000	0.375	99.308	50.000	100.000	50.0
15	0.000	0.625	99.308	50.000	100.000	50.0
16	0.000	0.875	98.776	50.000	100.000	50.0
17	0.250	0.250	86.836	0.000	87.500	0.0
18	0.250	0.500	86.876	0.000	87.500	0.0
19	0.250	0.750	86.836	0.000	87.500	0.0
20	0.500	0.,250	74.521	0.000	75.000	0.0
21	0.500	0.500	74.536	0.000	75.000	0.0
22	0.500	0.750	74.521	0.000	75.000	0.0
23	0.750	0.250	62.205	0.000	62.500	0.0
24	0.750	0.500	62.240	0.000	62.500	0.0
25	0.750	0.750	62.205	0.000	62.500	0.0

Taking into account the results from Table II when applying equations (61), acceptable values have been obtained for ε_t and ε_{ndt} (ε_t < 1.3%, ε_{ndt} < 3.5%) even if the number of boundary elements considered is small.

For metallic plaque in figure 3 the boundary can be discretized into N = 56 constant boundary elements (Fig. 13) and using BEM was determined isothermal curves presented in Figure 14.

VI. Conclusions

In practice there are many situations where it is indispensable to know the temperature distribution in a body (e.g. in different mechanic and electronic components). In civil engineering it is important to analyse the temperature distribution in thermal bridges, in pipe walls, in insulation materials [10].

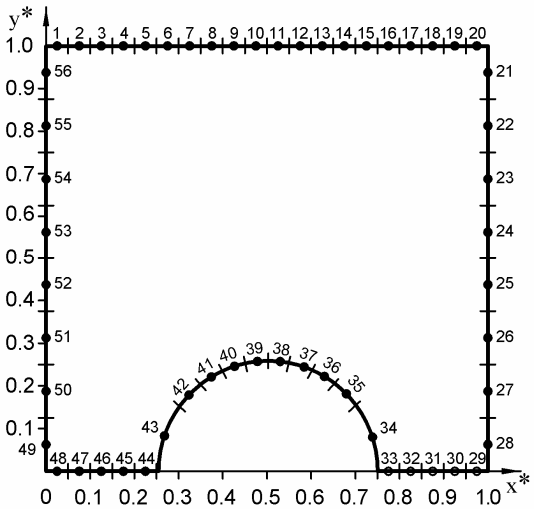

Fig. 13 Boundary discretization for the plaque with semicylindrical cut–out

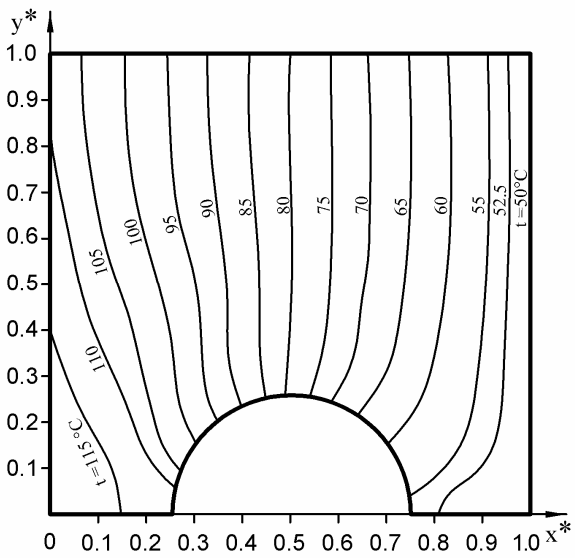

Fig. 14 Temperature distribution for the plaque with semicylindrical cut–out

The numerical modelling with finite and boundary elements represents an efficient way to obtain temperature distribution in steady state conductive heat transfer processes.

The numerical computation of the temperature field, on the basis of the boundary element method, has led to close values to the ones determined analytically even if a small number of boundary elements and respectively internal points of the analysis domain was used.

Using the presented methods, different simulation programs could be realized what makes it possible to effectuate a lot of different numerical experiments of practical problems.

REFERENCES

[1] A.S. Asad and S. Rama, Finite element heat transfer and structural analysis, *Proceedings of the WSEAS/IASME Int. Conference on Heat and Mass Transfer*, Corfu, Greece, August 17-19, 2004, pp. 112-120.

[2] A.S. Asad, Heat transfer on axisymmetric stagnation flow an infinite circular cylinder, *Proceedings of the 5th WSEAS Int. Conference on Heat and Mass Transfer*, Acapulco, Mexico, January 25-27, 2008, pp. 74-79.

[3] P.K. Banergee and R. Butterfield, *Boundary element methods in engineering science*, Mc.Graw–Hill, London, New York, 1981.

[4] C.A. Brebbia, J.C. Telles and I.C. Wrobel, *Boundary element techniques*, Springer Verlag, Berlin, Heidelberg, New York, 1984.

[5] G. Chen and J. Zhou, *Boundary element methods*, Academic Press, New York, 1992.

[6] M. Gafițanu, V. Poterașu and N. Mihalache, *Finite and boundary elements with applications to computation of machine components*, Technical Publishing House, Bucharest, 1987.

[7] S.K. Godunov and V.S. Reabenki, *Calculation schema with finite differences*, Technical Publishing House, Bucharest, 1977.

[8] A. Iosif, Numerical solution with linear boundary elements of thermal fields in steady state regime, *Proceedings of the 11th Int. Conference on Building Services and Ambient Comfort*, Timisoara, April 18-19, 2002, pp. 204-211.

[9] B.M. Irons and S. Ahmad, *Techniques of finite elements*, John Wiley, New York, 1980.

[10] G. Jóhanesson, *Lectures on building physics*, Kungl Tekniska Högskolan, Stockholm, 1999.

[11] J.H. Kane, *Boundary element analysis in engineering continuum mechanics*, Prentice–Hall, New Jersey, 1994.

[12] W.M. Kays and M.E. Crawford, *Convective heat and mass transfer*, McGraw–Hill, New York, 1993.

[13] A. Leca, C.E. Mladin and M. Stan, *Heat and mass transfer*, Technical Publishing House, Bucharest, 1998.

[14] A.J. Novak and A.C. Brebbia, The multiple reciprocity method: A new approach for transforming BEM domain integrals to the boundary, *Engineering Analysis*, vol. 6, no. 3, 1989, pp. 164-167.

[15] F. Paris and J. Cañas, *Boundary element method: fundamentals and applications*, Oxford University Press, Oxford, 1997.

[16] W.P. Partridge and A.C. Brebbia, Computer implementation of the BEM Dual reciprocity method for the solution of general field equations, *Comunications Applied Numerical Methods*, vol. 6, no. 2, 1990, pp. 83-92.

[17] S. Rao, *The finite element method in engineering*, Pergamon Press, New York, 1981.

[18] J.N. Reddy, *An introduction to the finite element method*, McGraw–Hill, New York, 1993.

[19] I. Sârbu, *Numerical modellings and optimizations in building services* (in Romanian), Publishing House Polytechnica, Timisoara, 2010.

[20] I. Sârbu, Numerical analysis of two dimensional heat conductivity in steady state regime, *Periodica Polytechnica Budapest*, vol 49, no. 2, 2005, pp. 149-162.

[21] I. Sârbu and A. Iosif, Numerical analysis of velocity and temperature field in concentric annular tube for the laminar forced heat convection, *Proceedings of the 8th IASME/WSEAS Int. Conference on Heat Transfer, Thermal Engineering and Environment*, Taipei, Taiwan, August 20-22, 2010.

[22] B.L. Wang and Z.H. Tian, Application of finite element – finite difference method to the determination of transient temperature field in functionally graded materials, *Finite Elements in Analysis and Design*, vol 41, 2005, pp. 335-349.

[23] B.L. Wang and Y.W. Mai, Transient one dimensional heat conduction problems solved by finite element, *International Journal of Mechanical Sciences*, vol. 47, 2005, pp. 303-317.

[24] Q. Wu and A. Sheng, A note on finite difference method to analysis an ill–posed problem, *Applied Mathematics and Computation*, vol 182, 2006, pp. 1040-1047.